Backup Box-(B0, B1)

Quick Guide

Issue: 01
Date: 2021-01-10

NOTICE

1. The information in this document is subject to change without notice. Every effort has been made in the preparation of this document to ensure accuracy of the contents, but all statements, information, and recommendations in this document do not constitute a warranty of any kind, express or implied.
2. Before installing the device, read the user manual carefully to get familiar with product information and safety precautions.
3. Only certified electricians are allowed to operate the device. Operation personnel must wear proper personal protective equipment (PPE).
4. Before installing the device, check that the package contents are intact and complete against the packing list. If any item is missing or damaged, contact your dealer.
5. The device damage caused by the violation of instructions in this document is not covered under warranty.
6. The cable colors involved in this document are for reference only. Select cables in accordance with local cable specifications.

1 Overview

Function

The Backup Box is used in a residential rooftop PV plant system to control the inverter grid-tied or off-grid state. When the grid fails, the inverter switches to the off-grid state and supplies power to off-grid loads in backup mode. When the grid recovers, the inverter switches back to the grid-tied state.

Model Number

Backup Box-B0

1 2

No.	Meaning	Value
1	Product name	Backup Box: Backup Box
2	Design code	B0: single-phase B1: three-phase

System Networking

The grid-tied system of a rooftop PV plant consists of PV strings, an energy storage system (ESS), an inverter, a Backup Box, a management system, an AC switch, and a power distribution unit.

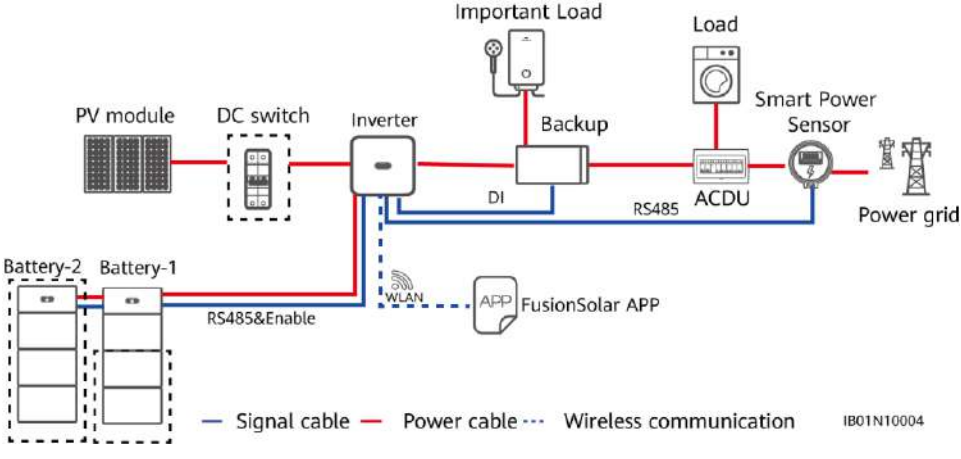

Supported Grid Types

The Backup Box supports the following grid types: TN-S, TN-C-S and TT. When the inverter is in three-phase, three-wire mode, the Backup Box does not support off-grid operation.

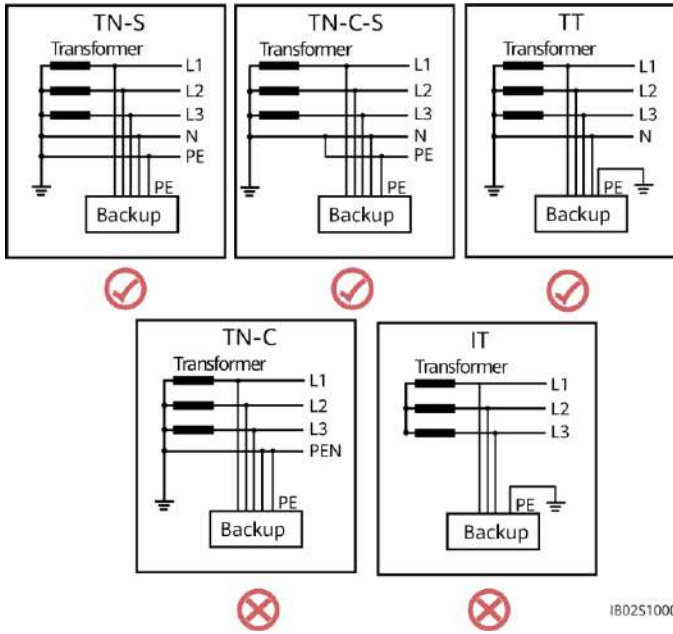

Appearance

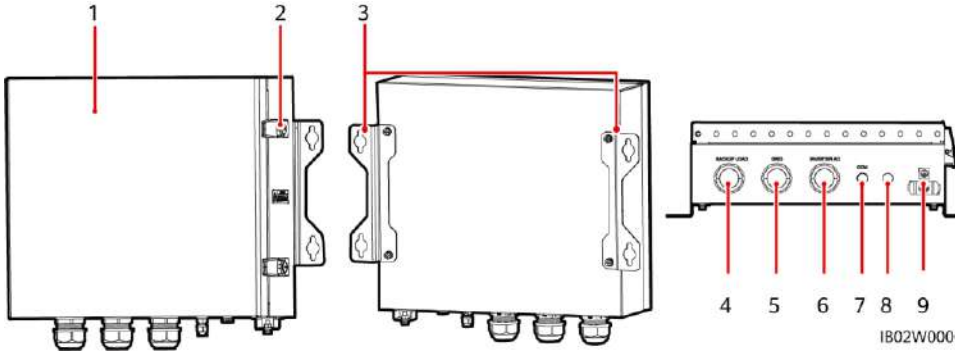

(1) Front panel

(2) Lock

(3) Hanging kit

(4) Off-grid load port (BACKUP LOAD)

(5) Grid AC port (GRID)

(6) Inverter AC port (INVERTER AC)

(7) COM port (COM)

(8) Ventilation valve

(9) Ground point

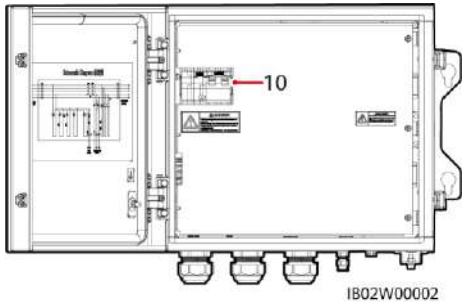

(10) Off-grid load switch

2 Device Installation

2.1 Installation Requirements

DANGER

1. When a Backup Box is installed outdoors, avoid direct sunlight. You are advised to install it in a sheltered place or install an awning over it.
2. A surge protective device (SPD) needs to be installed on the grid side of the Backup Box.

Installation Space Angle

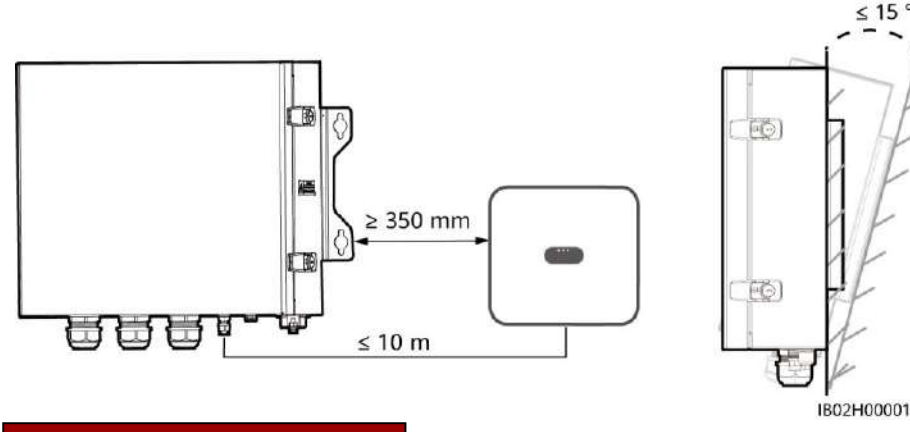

Mounting Holes and Dimensions

DANGER

When drilling holes, avoid the water pipes and power cables buried in the wall.

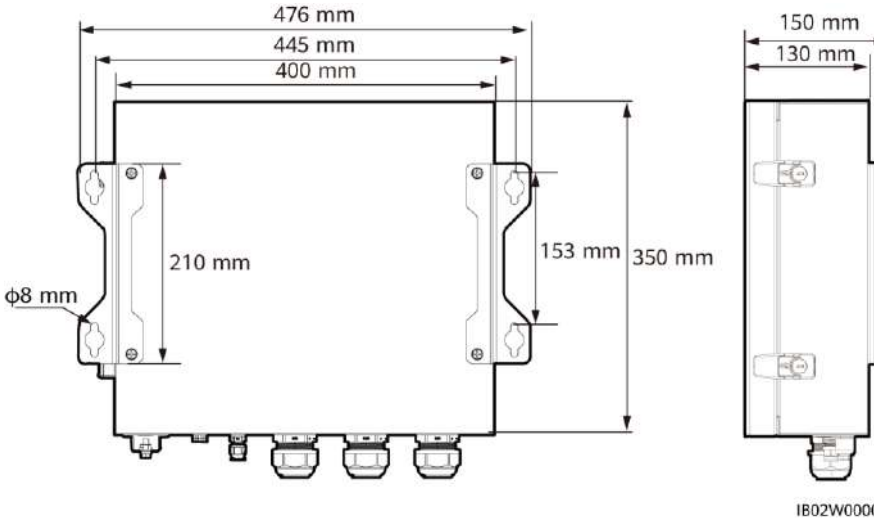

2.2 Installing a Backup Box

NOTE

- M6x60 expansion bolts are delivered with the Backup Box. If the length and number of the bolts do not meet installation requirements, prepare M6 stainless steel expansion bolts by yourself.
- The expansion bolts delivered with the inverter are mainly used for solid concrete walls. For other types of walls, prepare bolts by yourself and ensure that the wall meets the load bearing requirements of the inverter.
- In residential areas, do not install the inverter on drywalls or walls made of similar materials which have a weak sound insulation performance because the noise generated by the inverter is noticeable.

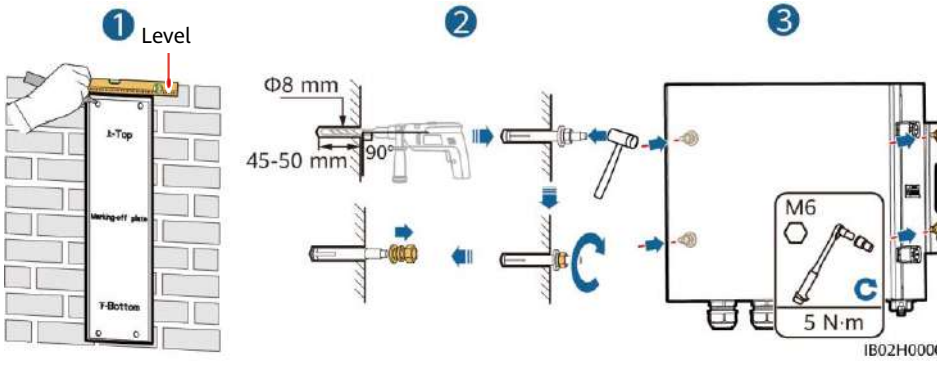

3 Electrical Connection

3.1 Preparations

NOTICE

- Connect cables in accordance with local installation laws and regulations.
- Before connecting cables, ensure that the circuit breaker on the Backup Box and all the switches connecting to the Backup Box are set to OFF position. Otherwise, the high voltage of the Backup Box may result in electric shocks.

Prepare cables based on site requirements.

No.	Cable	Type	Conductor Cross-Sectional Area Range	Outer Diameter
1	PE cable	Single-core outdoor copper cable	4–10 mm^2	N/A
2	Off-grid load output power cable	Outdoor copper cable	4–6 mm^2	10–21 mm
3	Grid AC output power cable	Outdoor copper cable	4–6 mm^2	10–21 mm
4	Inverter AC input power cable	Outdoor copper cable	4–6 mm^2	10–21 mm
5	Signal cable	Two-core outdoor shielded twisted pair cable	0.20–1 mm^2	4–8 mm

3.2 Installing a PE Cable

DANGER

Do not connect the neutral wire to the enclosure as a PE cable. Otherwise, electric shocks may occur.

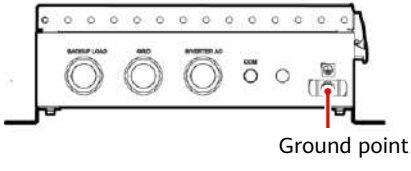

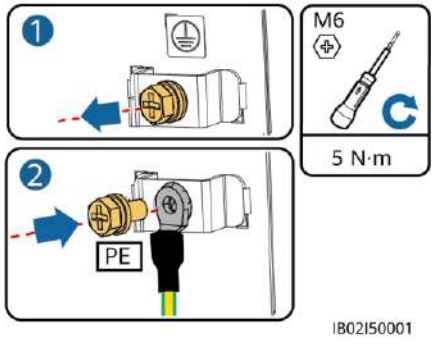

3.3 Installing an Output Power Cable for Off-Grid Loads

NOTE

Before installing a cable, open the panel of the Backup Box, route the cable through the off-grid load port, and connect the cable. After all cables are connected, reinstall the panel.

Off-Grid Load Terminal (X1)				
No.	1	2	3	4
Single-Phase	L	N	-	PE

Off-Grid Load Terminal (X1)				
No.	1	2	3	4
Three-Phase	L	N	-	PE

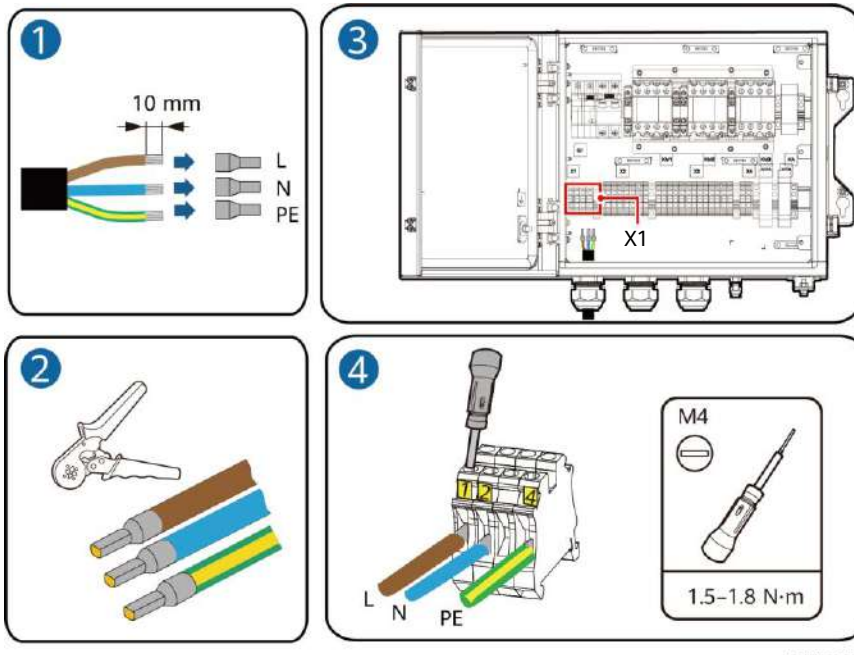

IB02I20001

3.4 Installing a Grid AC Output Power Cable

Connecting Grid AC Terminals（X2）							
No.	1	2	3	4	5	6	7
Single-Phase	L	-	-	N	-	PE	-

Connecting Grid AC Terminals（X2）							
No.	1	2	3	4	5	6	7
Three-Phase	L1	L2	L3	N	-	PE	-

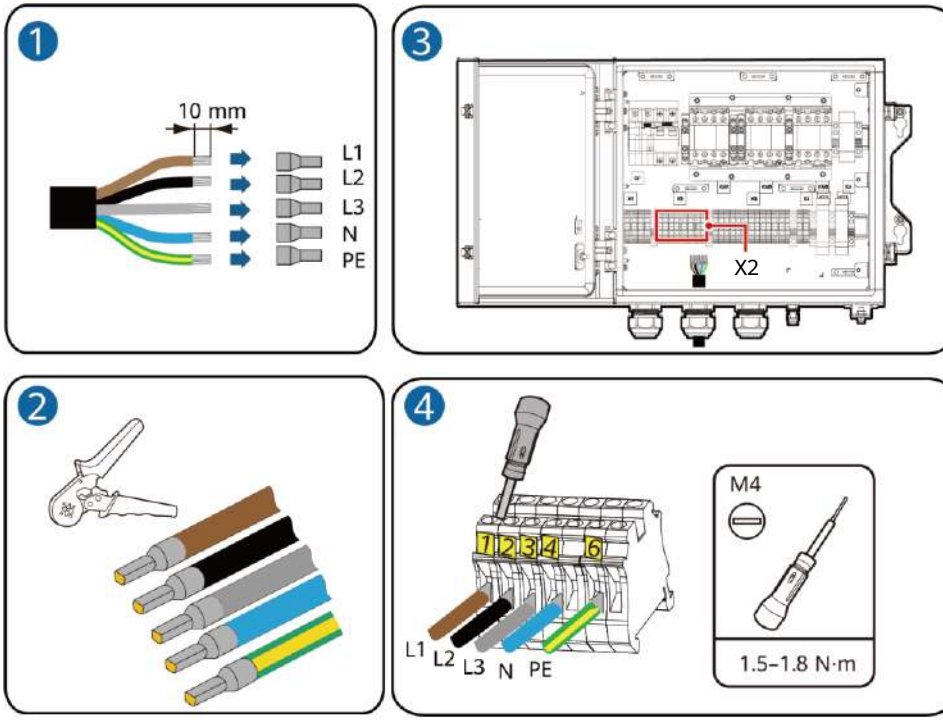

IB02I20002

NOTICE

If multiple inverters are connected in parallel, the connection of AC power cables L1, L2, and L3 on the power grid side of the Backup Boxes connected to each inverter must be the same.

3.5 Installing an Inverter AC Input Power Cable

Connecting AC Input Terminals of the Inverter（X3）											
No.	1	2	3	4	5	6	7	8	9	10	11
Single-Phase	-	L	-	-	-	N	-	-	-	PE	-

Connecting AC Input Terminals of the Inverter（X3）													
No.	1	2	3	4	5	6	7	8	9	10	11	12	13
Three-Phase	L1	-	L2	-	L3	-	-	N	-	-	-	PE	-

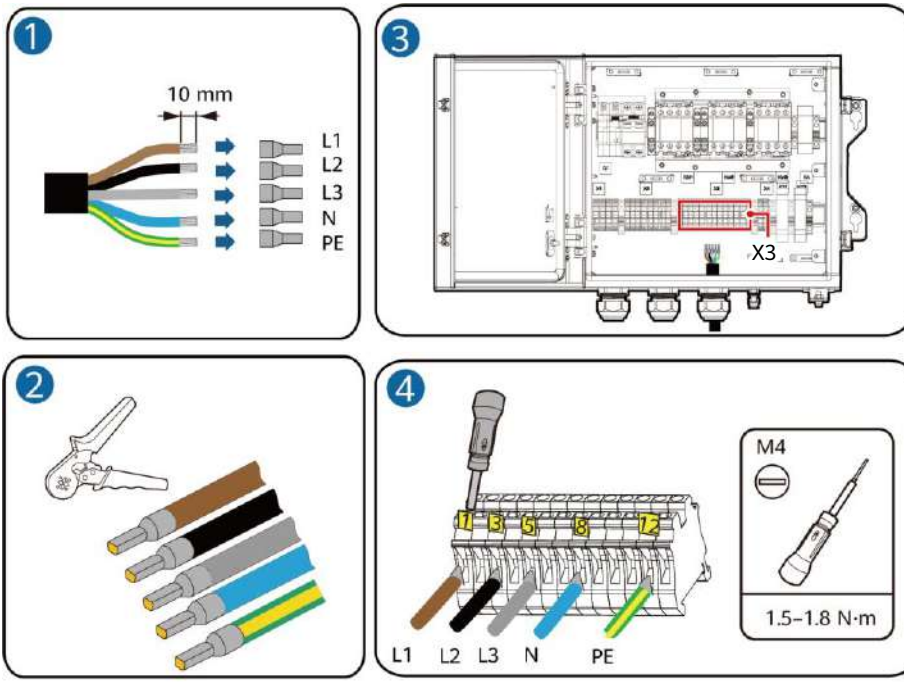

IB02I20003

NOTICE

The sequence of connecting the cables to a single-phase Backup Box and to the AC terminals L, N, and PE on the inverter must be the same. The sequence of connecting the cables to a three-phase Backup Box and to the AC terminals L1, L2, and L3 on the inverter must be the same. Otherwise, the device cannot work properly. (As shown in the following figures, connect the cables to a single-phase Backup Box in the sequence of L, N, and PE from left to right, and connect the cables to a three-phase Backup Box in the sequence of L1, L2, and L3.)

Backup Box-side terminal (single-phase)

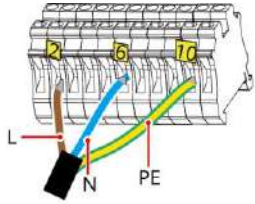

Inverter-side terminal (single-phase)

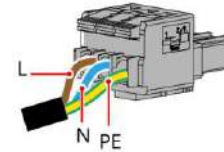

Backup Box-side terminal (three-phase)

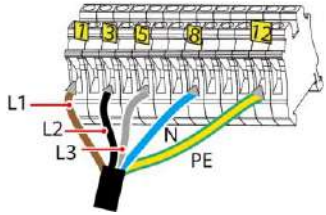

Inverter-side terminal (three-phase)

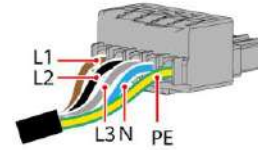

IB02I20004

3.6 Installing a Short-Circuiting Plate

DANGER

- When installing a short-circuiting plate, ensure that it is inserted into the correct port and securely installed to avoid short circuits caused by incorrect installation.
- If no short-circuiting plate is installed, the neutral wire will be suspended in off-grid mode, but the off-grid/grid-tied switching function is not affected. You are advised to install a short-circuiting plate according to the local power grid standard.

Neutral Wire Connected

If the neutral wire cannot be disconnected from the power grid in off-grid mode (such as in Australia), insert the short-circuiting plate between 4 and 5 of the AC terminal X2 according to the local power grid standard.

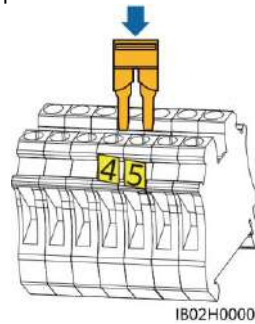

Power grid AC terminal X2 (Single-Phase/Three-Phase)

IB02H00003

Neutral Wire Disconnected

If the neutral wire needs to be disconnected in off-grid mode (such as in German), according to the local power grid standard, insert the short-circuiting plate between 10 and 11 of the AC terminal X3 for the single-phase Backup Box. Insert the short-circuiting plate between 12 and 13 of the AC terminal X3 for the three-phase Backup Box.

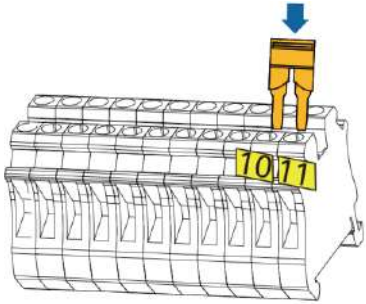

Inverter AC terminal X3 (single-phase)

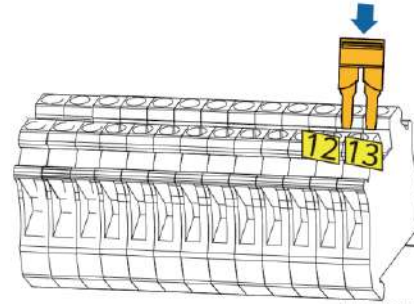

IB02H00004

Inverter AC terminal X3 (three-phase)

3.7 Installing Signal Cables

Communications Terminal Definition

No.	Label	Definition	Note
1	DI	Digital input signal+	Connects to the positive pole of the DI port and functions as the port for the Backup Box to send feedback signals.
2	GND	GND of the DI port	Connects to the GND of the DI port.

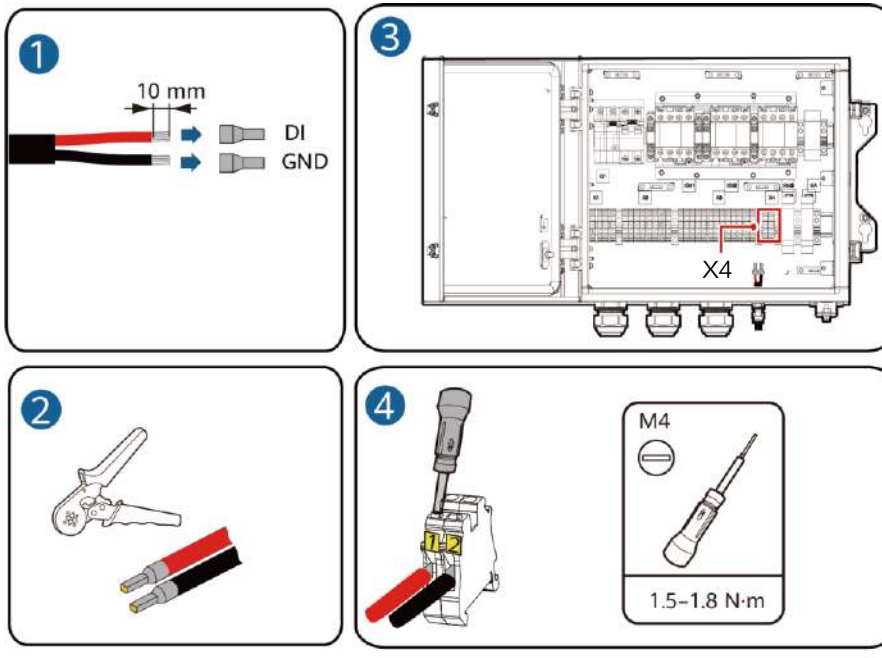

IB02I20005

3.8 Connecting Signal Cables on the Inverter Side

SUN2000-(2KTL-6KTL)-L1

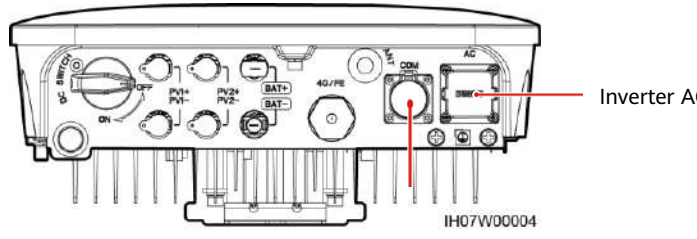

COM Port Pin Definitions

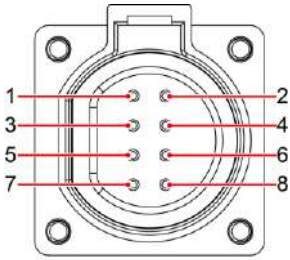

No.	Label	Definition	Description
5	GND	GND	Connects to the GND of the DI2 port.
8	DI2	Digital input signal 2+	Connects to the positive terminal of DI2 and functions as the port for the Backup Box to send feedback signals.

SUN2000-(3KTL-12KTL)-M1

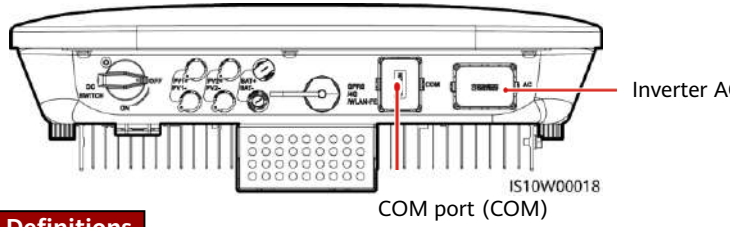

COM Port Pin Definitions

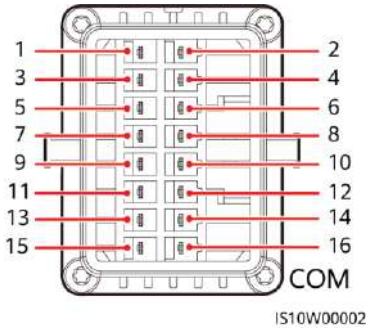

No.	Label	Definition	Note
8	DIN1	Digital input signal 1+	Functions as the port for the Backup Box to send feedback signals.
16	GND	GND	Connects to the GND of DIN1.

4 Verifying the Installation

No.	Acceptance Criteria
1	The installation is correct and reliable.
2	Cables are routed properly as required by the customer.
3	Cable ties are secured evenly and no burr exists.
4	The PE cable is connected correctly, securely, and reliably.
5	The switch of the Backup Box and all the switches connected to it are OFF.
6	Cables are connected correctly and securely. Use a phase sequence meter to check whether the cables on the grid side are connected correctly.
7	Unused terminals and ports are locked by watertight caps.
8	The installation space is proper, and the installation environment is clean and tidy.

5 Powering On the System

1. Use a multimeter to check whether the AC voltage in the power distribution box (PDB) is within the allowed range and whether cables are correctly connected.
2. Turn on the PDB AC switch between the Backup Box and the power grid. (Ensure that the load switch of the Backup Box is OFF.)
3. Check whether the cable connection of the grid AC terminals is correct.
4. (Optional) Remove the locking screw beside the DC switch on the inverter.

5. Turn on the DC switch (if any) between the PV strings and the inverter.
6. Turn on the DC switch at the bottom of the inverter.
7. Check that the off-grid load power does not exceed the off-grid output power allowed by the inverter.
8. After ensuring that the load circuit is normal, turn on the AC switch of the Backup Box.
9. Observe the LED indicators on the front of the inverter to check the running status of the inverter.

Category	Status (Blinking Slowly, On for 1s and then Off for 1s)		Definition
Running indication			N/A
	Steady green	Steady green	On-grid
	Steady orange	Steady orange	Backup
	Blinking orange slowly	Off	Standby in backup mode
	Blinking orange slowly	Blinking orange slowly	Overload in backup mode

NOTE

If the off-grid load is overloaded, indicators and on the inverter blink orange slowly. Reduce the off-grid load power and manually clear the alarm or until the inverter is recovered. If the inverter is standby in off-grid mode, check the inverter alarms and rectify the fault.

6 System Commissioning

NOTE

During system deployment, the AC power supply needs to be connected to ensure that the off-grid/grid-tied switching function of the Backup Box can be verified.

Download and install the latest version of the FusionSolar app by referring to the quick guide for the corresponding inverter model or the *FusionSolar App Quick Guide*. Register an installer account and create a plant and owner (skip this step if an account has been created). You can scan the QR code to obtain the *FusionSolar App Quick Guide*.

Parameter Settings

Open the FusionSolar app, log in to intl.fusionsolar.huawei.com using the installer account, choose **My** > **Device Commissioning**, and connect to the WLAN hotspot of the solar inverter. On the home page, choose **Setting** > **Feature parameters** to set the off-grid/grid-tied control parameters.

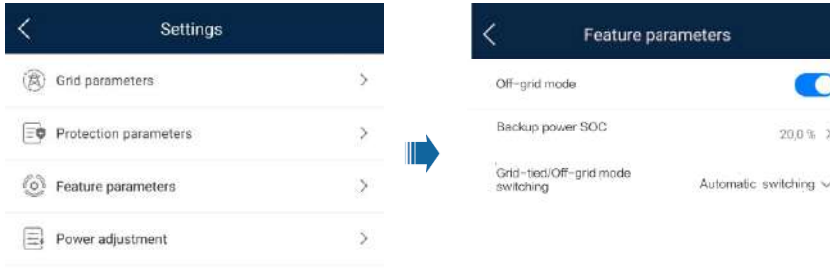

Parameter	Settings	Value
Off-grid mode	If this parameter is enabled, the Backup Box switches to the off-grid mode when the grid fails. This parameter can be set only when the Backup Box is configured. If the Backup Box is not configured, this parameter cannot be enabled. Otherwise, an alarm is generated.	• Enable • Disabled (default)
Backup power SOC	Sets the backup power SOC. In grid-tied mode, the battery does not discharge when it is discharged to the backup power SOC. When the grid fails, the battery supplies power to loads in off-grid mode until it reaches the end-of-discharge capacity.	[20%, 100%] Default value: N/A
Grid-tied/Off-grid mode switching	If this parameter is set to Automatic switching, the system switches to the off-grid mode when the grid fails, and switches to the grid-tied mode when the grid recovers. If this parameter is set to Manual switching, you need to log in to the app and connect the inverter to enable the off-grid mode when the grid fails.	• Automatic switching (default) • Manual switching

Verifying the Off-grid/Grid-tied Switching Function

1. Power on the Backup Box according to the power-on procedure, wait for the inverter to connect to the power grid, and log in to the app to enable **Off-grid mode**.
2. Turn off the AC switch in the PDB between the Backup Box and the power grid, and check whether the off-grid output is normal. The inverter indicators and are steady orange. (If the AC switch between the inverter and the Backup Box is turned off, the off-grid switching is not triggered and the inverter is in off-grid standby mode.)
3. Turn on the AC switch in the PDB between the Backup Box and the power grid. The inverter indicators and blink green slowly until the inverter is connected to the power grid.

7 Routine Maintenance

To ensure the long-term and proper running of the system, you are advised to perform routine maintenance on the Backup Box periodically.

1. Check the system cleanliness, system running status, electrical connection, and grounding reliability every half year.
2. Check whether the off-grid/grid-tied switching function is normal each quarter.

8 Troubleshooting

1. Backup Box checking solution:

After arriving at the site, the personnel can check whether the Backup Box is damaged as follows:

a. It is recommended that loads be disconnected before checking.
b. Use a multimeter to check the connectivity between the Backup Box terminals, as shown in the following tables.

Single-Phase Backup Box

No.	Wiring Requirements			Detection Terminal				
	Circuit Breaker (QF)	Grid	Inverter	X4-1 & X4-2 COM-1 & COM-2	X2-1 & X3-2 GRID-L & INVERTER-L	X3-6 & X3-10 INVERTER-N & INVERTER-PE	X2-1 & X1-1 GRID-L & LOAD-L	X3-6 & X1-2 INVERTER-N & LOAD-N
1	On	Power off	Shutdown	Connected	Disconnected	Disconnected	Disconnected	Connected
2	On	Power on	Shutdown	Disconnected	Connected	Disconnected	Connected	Connected
3	On	Power off	Off-grid output	Connected	Disconnected	Connected	Disconnected	Connected

Three-Phase Backup Box

No.	Wiring Requirements			Detection Terminal				
	Circuit Breaker (QF)	Grid	Inverter	X4-1 & X4-2 COM-1 & COM-2	X2-1 & X3-1 GRID-L1 & INVERTER-L1	X3-3 & X3-8 INVERTER-L2 & INVERTER-N	X2-1 & X1-1 GRID-L1 & LOAD-L	X3-3 & X1-2 INVERTER-L2 & LOAD-N
1	On	Power off	Shutdown	Connected	Disconnected	Disconnected	Disconnected	Disconnected
2	On	Power on	Shutdown	Disconnected	Connected	Disconnected	Connected	Disconnected
3	On	Power off	Off-grid output	Connected	Disconnected	Connected	Disconnected	Connected

c. If the conduction status of an item is inconsistent with that in the tables, the Backup Box is damaged.

2. If the mains recovers but the inverter still works in off-grid state (LED1 and LED2 are steady orange), contact the customer service personnel or dealer for repair.
3. If the off-grid mode is enabled when no Backup Box is connected, an alarm indicating that the Backup Box is abnormal is reported when the AC power supply is disconnected. In this case, the fault cannot be rectified. The fault is rectified only after the inverter and battery are powered off.
4. If the Backup Box is used for the first time and is not used later, you must disable the off-grid mode when the inverter is running properly. Otherwise, you need to power on the inverter again and modify the settings.
5. If the single-phase Backup Box generates abnormal noises during repeated switching, check whether the inverter AC terminal is reversely connected to the power grid AC terminal.

9 Customer Service Contact Information

Customer Service Contact			
Region	**Country**	**Service Support Email**	**Phone**
Europe	France	eu_inverter_support@huawei.com	0080033888888
	Germany		
	Spain		
	Italy		
	UK		
	Netherlands		
	Other countries	For details, see solar.huawei.com.	
Asia Pacific	Australia	eu_inverter_support@huawei.com	1800046639
	Turkey	eu_inverter_support@huawei.com	N/A
	Malaysia	apsupport@huawei.com	0080021686868 /1800220036
	Thailand		(+66) 26542662 (charged by local call)
			1800290055 (free in Thailand)
	China	solarservice@huawei.com	400-822-9999
	Other countries	apsupport@huawei.com	0060-3-21686868
Japan	Japan	Japan_ESC@ms.huawei.com	0120258367
India	India	indiaenterprise_TAC@huawei.com	1800 103 8009
South Korea	South Korea	Japan_ESC@ms.huawei.com	N/A
North America	USA	eu_inverter_support@huawei.com	1-877-948-2934
	Canada	eu_inverter_support@huawei.com	1-855-482-9343
Latin America	Mexico	la_inverter_support@huawei.com	018007703456 /0052-442-4288288
	Argentina		0-8009993456
	Brazil		0-8005953456
	Chile		800201866 (only for fixed)
	Other countries		0052-442-4288288
Middle East and Africa	Egypt	eu_inverter_support@huawei.com	08002229000 /0020235353900
	UAE		08002229000
	South Africa		0800222900
	Saudi Arabia		8001161177
	Pakistan		0092512800019
	Morocco		0800009900
	Other countries		0020235353900